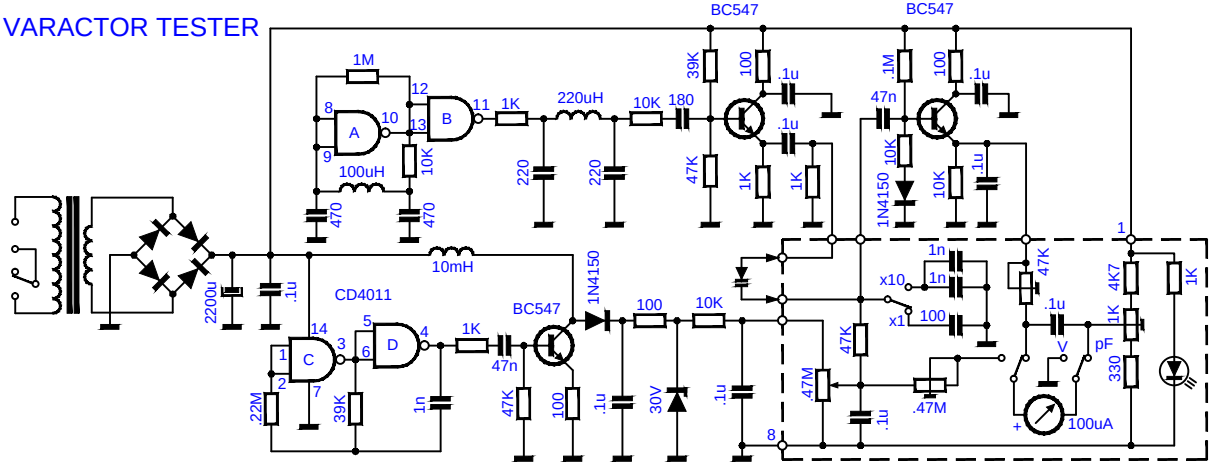VARACTOR TESTER