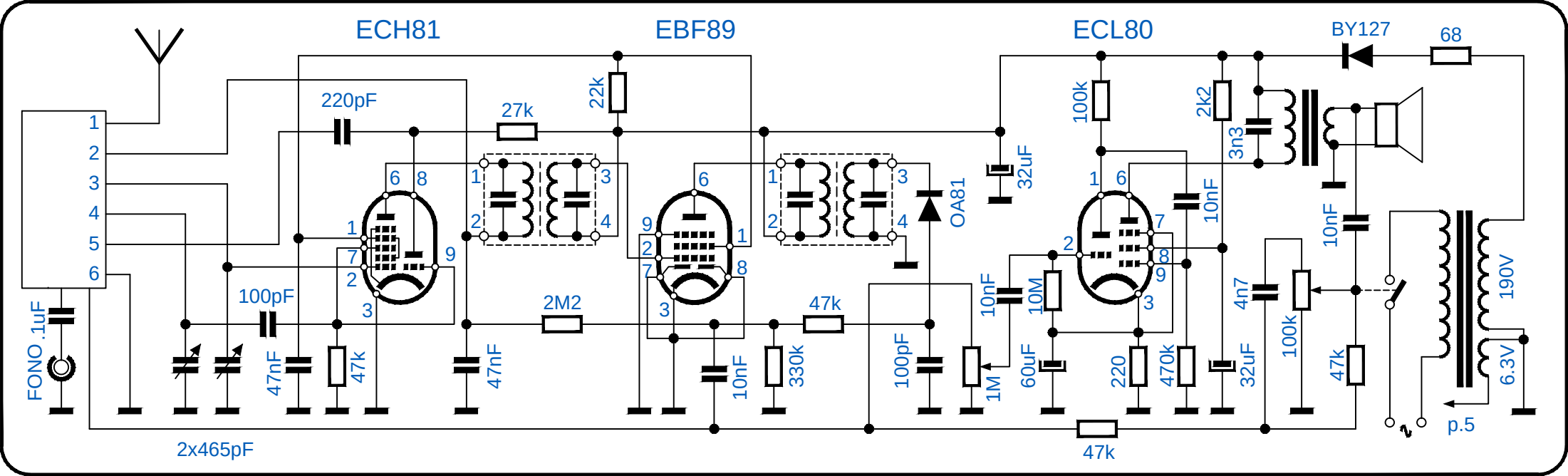
ECH81
EBF89
ECL80
BY127
68
220pF
27k
22k
100k
2k2
3n3
32uF
OA81
10nF
10nF
190V
6.3V
p.5
FONO
.1uF
100pF
47nF
47k
47nF
2M2
10nF
330k
47k
100pF
1M
10M
60uF
220
470k
32uF
4n7
100k
47k
47k
2x465pF