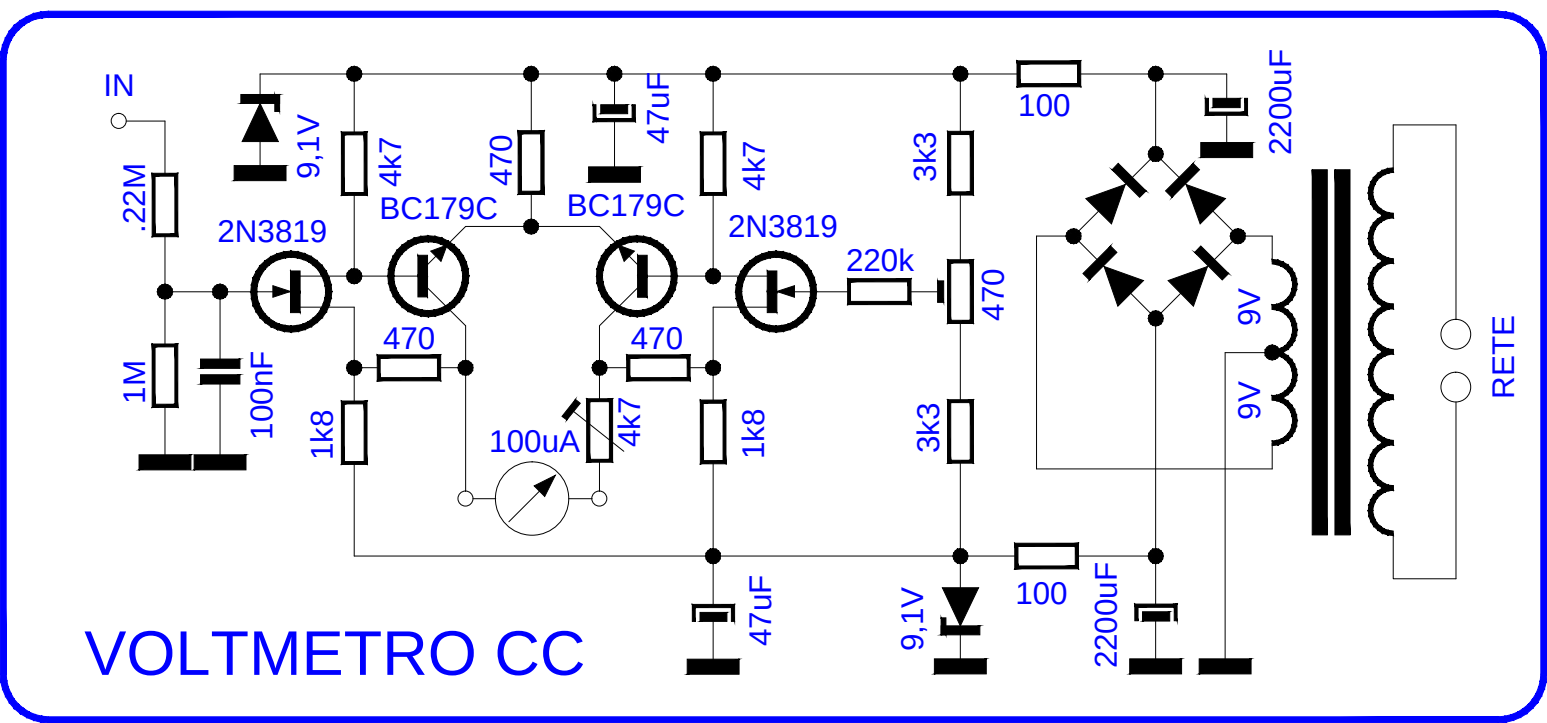
IN
.22M
1M
100nF
9,1V
4k7
470
47uF
BC179C
BC179C
2N3819
2N3819
470
470
1k8
1k8
100uA
4k7
220k
3k3
3k3
470
100
100
2200uF
2200uF
9,1V
47uF
9V
9V
RETE
VOLTMETRO CC